The Right Connection®

HSG-Series Sight Glass

Engineered Product Reference Guide

dixonvalve.com

Customer Service
800.789.1718

HSG-Series Sight Glass

3685
65-01

Used in sanitary processes to view fluids. This sight glass is 3A certified and can be cleaned-in-place.They are found in the food processing, beverage, dairy, personal care, winery, brewery, pet product, and industrial markets.

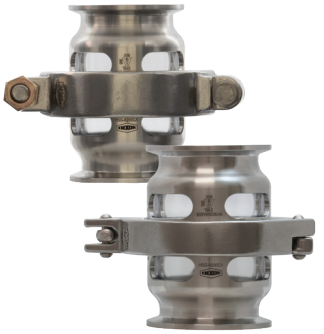

Sizes
- 1/2" to 6"

Feature
- Easy assembly and disassembly

Specifications
- Standard clamp connect
- Materials of construction
  - Product contact metal components: 316L stainless steel
  - Non-product contact metal components: CF8
- Product contact seal components:
  - EPDM and FKM: single pin clamp style sizes 1" to 6"
  - PTFE: bolted clamp style sizes 1/2" to 6"
- Maximum operating temperature: **200°F (93°C)**
- Minimum operating temperature: **0°F (-17°C)**
- Surface finish technical data:
  - Product contact metal components: Ra ≤ 32

Maximum Line Pressure and Product Temperature

Size	Pressure (PSI) at 70°F (21°C)	Pressure (PSI) at 200°F (93°C)
1/2"	**500**	**300**
3/4"	**500**	**300**
1"	**500**	**300**
1-1/2"	**450**	**250**
2"	**400**	**200**
2-1/2"	**350**	**175**
3"	**250**	**125**
4"	**80**	**40**
6"	**50**	**25**

HSG-Series 3A Sight Glass - Part Number Key

Dixon HSG-Series 3A Sight Glass Part Number Key Example: HSGE100CCA		Series	Elastomers	Size	Body One Connection	Body Two Connection	Surface Finish
		HSG	E	100	C	C	A
Series	**Code**						
HSG	HSG						
Elastomer	**Code**						
EPDM (1" - 6") single pin clamp	E						
FKM (1" - 6") single pin clamp	V						
PTFE (1/2" - 6") single pin clamp	P						
Size	**Code**						
1/2" (only available in PTFE)	050						
3/4" (only available in PTFE)	075						
1"	100						
1-1/2"	150						
2"	200						
2-1/2"	250						
3"	300						
4"	400						
6"	600						
Body One Connection	**Code**						
Clamp (standard)	C						
Weld	B						
Female I-Line	F						
Male I-Line	M						
Threaded Bevel	T						
Plain Bevel with Nut	P						
Q-Line	Q						
Body Two Connection	**Code**						
Clamp (standard)	C						
Weld	B						
Female I-Line	F						
Male I-Line	M						
Threaded Bevel	T						
Plain Bevel with Nut	P						
Q-Line	Q						
Surface Finish	**Code**						
32 Ra (I.D. mechanical polish)	A						
25 Ra (I.D. mechanical polish)	B						
20 Ra (I.D. mechanical polish)	C						
15 Ra (I.D. mechanical polish)	D						
10 Ra (I.D. mechanical polish)	E						

HSG-Series Sight Glass - Bill of Materials

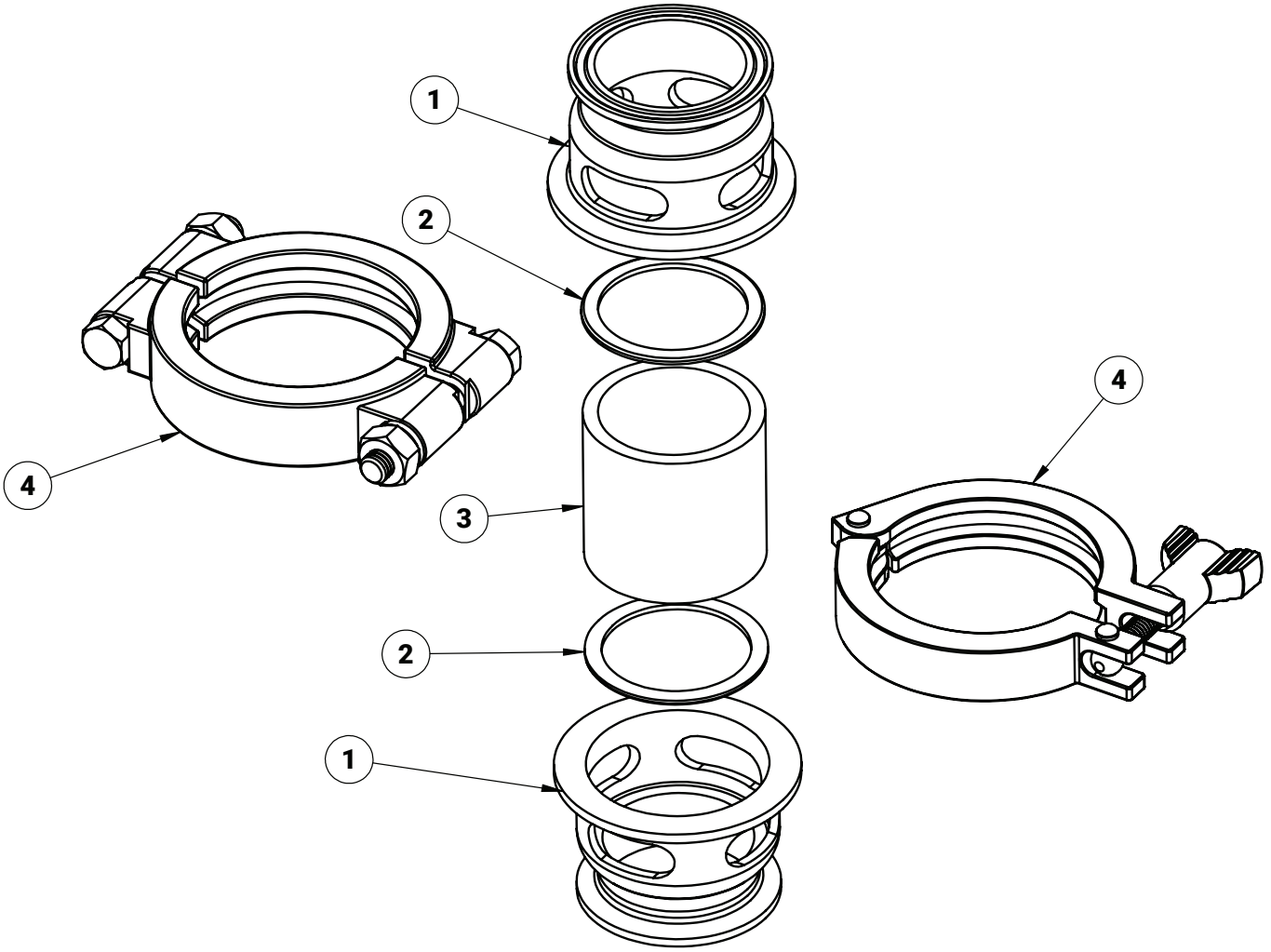

HSG-Series Sight Glass - Bill of Materials

Item	HSG Size	Part #	Description	Material	Qty.		
					EPDM	FKM	PTFE
1	1/2"	HSG-B050CA	body, tri-clamp	316L stainless steel	2	2	2
	3/4"	HSG-B075CA					
	1"	HSG-B100CA					
	1-1/2"	HSG-B150CA					
	2"	HSG-B200CA					
	2-1/2"	HSG-B250CA					
	3"	HSG-B300CA					
	4"	HSG-B400CA					
	6"	HSG-B600CA					
2	1/2"	HSG-RKP050	PTFE gasket kit (2 gaskets)	PTFE	-	-	1
	3/4"	HSG-RKP075	PTFE gasket kit (2 gaskets)	PTFE	-	-	1
	1"	40IE100	I-line gasket, 3/32" thick	EPDM	2	-	-
		40IV100		FKM	-	2	-
		HSG-RKP100	PTFE gasket kit (2 gaskets)	PTFE	-	-	1
	1-1/2"	40IE150	I-line gasket, 3/32" thick	EPDM	2	-	-
		40IV150		FKM	-	2	-
		HSG-RKP150	PTFE gasket kit (2 gaskets)	PTFE	-	-	1
	2"	40IE200	I-line gasket, 3/32" thick	EPDM	2	-	-
		40IV200		FKM	-	2	-
		HSG-RKP200	PTFE gasket kit (2 gaskets)	PTFE	-	-	1
	2-1/2"	40IE250	I-line gasket, 3/32" thick	EPDM	2	-	-
		40IV250		FKM	-	2	-
		HSG-RKP250	PTFE gasket kit (2 gaskets)	PTFE	-	-	1
	3"	40IE300	I-line gasket, 3/32" thick	EPDM	2	-	-
		40IV300		FKM	-	2	-
		HSG-RKP300	PTFE gasket kit (2 gaskets)	PTFE	-	-	1
	4"	40IE400	I-line gasket, 3/32" thick	EPDM	2	-	-
		40IV400		FKM	-	2	-
		HSG-RKP400	PTFE gasket kit (2 gaskets)	PTFE	-	-	1
	6"	40IE600	I-line gasket, 3/32" thick	EPDM	2	-	-
		40IV600		FKM	-	2	-
		HSG-RKP600	PTFE gasket kit (2 gaskets)	PTFE	-	-	1
3	1/2"	HSG-POLY-050	insert	Polycarbonate	1	1	1
	3/4"	HSG-POLY-075					
	1"	HSG-POLY-100					
	1-1/2"	HSG-POLY-150					
	2"	HSG-POLY-200					
	2-1/2"	HSG-POLY-250					
	3"	HSG-POLY-300					
	4"	HSG-POLY-400					
	6"	HSG-POLY-600					
4	1/2"	13MHP100-150	bolted clamp	CF8	-	-	1
	3/4"	13MHP100-150	bolted clamp	CF8	-	-	1
	1"	13MHHM100-150SN	single pin clamp	CF8	1	1	-
		13MHP100-150	bolted clamp		-	-	1
	1-1/2"	13MHHM200SN	single pin clamp	CF8	1	1	-
		13MHP200	bolted clamp		-	-	1
	2"	13MHHM250SN	single pin clamp	CF8	1	1	-
		13MHP250	bolted clamp		-	-	1
	2-1/2"	13MHHM300SN	single pin clamp	CF8	1	1	-
		13MHP300	bolted clamp		-	-	1
	3"	13MHHV300	single pin clamp	CF8	1	1	-
		13MHPV300	bolted clamp		-	-	1
	4"	13MHHV400	single pin clamp	CF8	1	1	-
		14MHPV400	bolted clamp		-	-	1
	6"	13MHHM800SN	single pin clamp	CF8	1	1	-
		13MHP800	bolted clamp		-	-	1

HSG-Series Sight Glass - Dimensions

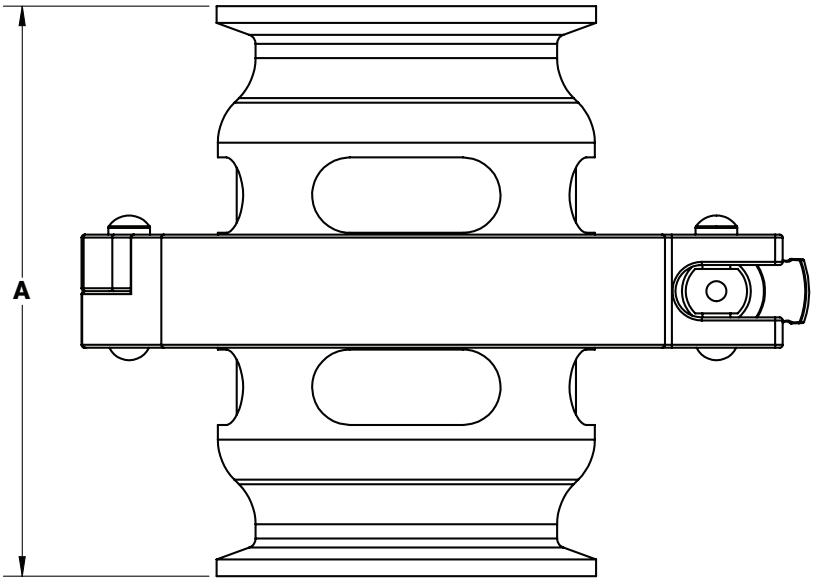

Size	A
1/2"	3.8"
3/4"	3.8"
1"	3.8"
1-1/2"	3.8"
2"	3.8"
2-1/2"	3.8"
3"	3.8"
4"	3.8"
6"	6.0"

HSG-Series Sight Glass - Repair Kits

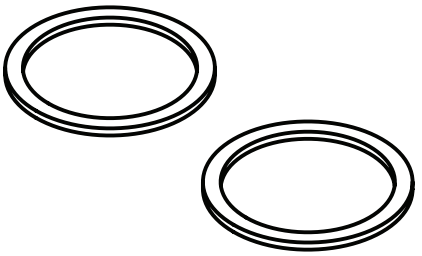

Seal Material	Size	Part #	Seal Material	Size	Part #	Seal Material	Size	Part #
PTFE	1/2"	HSG-RKP050	EPDM	1/2"	-	FKM	1/2"	-
	3/4"	HSG-RKP075		3/4"	-		3/4"	-
	1"	HSG-RKP100		1"	HSG-RKE100		1"	HSG-RKV100
	1-1/2"	HSG-RKP150		1-1/2"	HSG-RKE150		1-1/2"	HSG-RKV150
	2"	HSG-RKP200		2"	HSG-RKE200		2"	HSG-RKV200
	2-1/2"	HSG-RKP250		2-1/2"	HSG-RKE250		2-1/2"	HSG-RKV250
	3"	HSG-RKP300		3"	HSG-RKE300		3"	HSG-RKV300
	4"	HSG-RKP400		4"	HSG-RKE400		4"	HSG-RKV400
	6"	HSG-RKP600		6"	HSG-RKE600		6"	HSG-RKV600

Limited Warranty

DIXON VALVE & COUPLING COMPANY, LLC (herein called "Dixon") warrants the products described herein and manufactured by Dixon to be free from defects in material and workmanship for a period of one (1) year from date of shipment by Dixon under normal use and service. Its sole obligation under this warranty being limited to repairing or replacing, as hereinafter provided, at its option any product found to Dixon's satisfaction to be defective upon examination by it, provided that such product shall be returned for inspection to Dixon's factory within three (3) months after discovery of the defect. The repair or replacement of defective products will be made without charge for parts or labor. This warranty shall not apply to: (a) parts or products not manufactured by Dixon, the warranty of such items being limited to the actual warranty extended to Dixon by its supplier; (b) any product that has been subject to abuse, negligence, accident, or misapplication; (c) any product altered or repaired by others than Dixon; and (d) normal maintenance services and the replacement of service items (such as washers, gaskets, and lubricants) made in connection with such services. To the extent permitted by law, this limited warranty shall extend only to the buyer and any other person reasonably expected to use or consume the goods who is injured in person by any breach of the warranty. No action may be brought against Dixon for an alleged breach of warranty unless such action is instituted within one (1) year from the date the cause of action accrues. This limited warranty shall be construed and enforced to the fullest extent allowable by applicable law.

Other than the obligation of Dixon set forth herein, Dixon disclaims all warranties, express or implied, including but not limited to any implied warranties of merchantability or fitness for a particular purpose, and any other obligation or liability. The foregoing constitutes Dixon's sole obligation with respect to damages, whether direct, incidental, or consequential, resulting from the use or performance of the product.

Some products and sizes may be discontinued when stock is depleted or may require a minimum quantity for ordering.

Limits of Liability

This brochure is intended as a product offering. It is not intended to be a user or technical manual. Information in this brochure is subject to change without notice. All users and distributors of products sold through this brochure should contact Dixon with questions of use, compatibilities, coupling procedures, and life of product. Our full-time engineering and test staff are always available to recommend uses and to assist distributors and users with any questions.

Safety

Safety logos, which appear throughout our catalog, are used as a reminder that the user should carefully review for the appropriateness of the product for the media, application, and environment in which it will be used.

NOTE: Because of the health hazards associated with contamination and lead content in drinking water systems, Dixon couplings, unless otherwise specifically approved, are not recommended for potable water service and should not be used in applications where drinking water will contact the wetted surfaces of the coupling.

All Dixon products are shipped in cartons with the following warning:
"**WARNING:** This product contains lead, a chemical known to the State of California to cause cancer and birth defects or other reproductive harm."

Trademark

Delrin® and Zytel® are registered trademarks of E.I. duPont Nemours and Company.

Kalrez® is a registered trademark of DuPont Dow Elastomers.

All other trademarks appearing in the Dixon illustrated product list are the property of their respective owners.

Copyright

Copyright © 2023 by Dixon Valve & Coupling Company, LLC

All rights reserved. This book is copyrighted material. Use, reproduction or copying of it by anyone other than Dixon® is strictly forbidden without its express written consent.

NOTE: Reasonable care has been taken in preparing this catalog. Dixon Valve & Coupling Company, LLC reserves the right to make corrections.

The Right Connection®

Dixon Sanitary

N25 W23040 Paul Road, Pewaukee, WI 53072
Phone: 800.789.1718
Fax: 800.789.4046
Email: sanitarysales@dixonvalve.com
dixonvalve.com

connect with us on

© 2023 DVCC

DSEPRG2023_HSG

Printed in the USA